LORENTZ

PS150 BOOST

INSTRUCTIONS FOR
INSTALLATION
OPERATION
SERVICE

Copyright © 2004, 2005, 2006, 2007 by BERNT LORENTZ GmbH&CoKG, all rights reserved.

CONTENTS

1 INTRODUCTION 2

2 WARNINGS 3

3 DIMENSIONS 3

4 SYSTEM REPORT FORM 4

5 INSTALLATION CONTROLLER PS150 5

5.1 General Information 5
5.2 Warnings to Installer 5
5. 3 Mechanical Installation 5
5.2 Technical Data 5
5.4 Electrical Installation-Terminals 6
5.5 Monitoring 6
5.6 Basic Operating Constraints 7

6 PLUMBING SYSTEM DESIGN 7

7 MOUNTING YOUR PUMP 8

8 INSTALLATION IN DRILLED WELL CASINGS 9

9 ELECTRICAL WIRING 9

9.1 General 9
9.2 Grounding and Lightning Protection 9
9.3 System Wiring for 12 V Battery Installation 10
9.4 System Wiring for 24 V Battery Installation 10
9.5 System Wiring for 12-24 V Solar Direct Operation 11
9.6 Power Control for Solar Direct Operation 11

10 WATER LEVEL AND FLOW CONTROL 12

11 PRESSURIZING SYSTEMS 12

11.1 Pressure Switch Wiring 13

12 MAINTENANCE 13

13 TROUBLESHOOTING 14

14 WARRANTY 15

Symbols

WARNING

disregard might lead to injury or damage the installation

CAUTION

recommended to avoid disfunction or premature ageing of the pump etc.

1 INTRODUCTION

Thank you for purchasing *a LORENTZ PUMP*. *We* set a new standard for quality and economy in solar pumping. It incorporates the best solar pump technologies that were very expensive until its introduction in 2002.

PS150 BOOST is a highly efficient pump system which provides city water pressure, anywhere. It is economical for domestic water supply, (drip-) irrigation, livestock, water transfer to remote places and many other applications. It is a surface pump which cannot be submersed.

The pump of PS150 BOOST is a **positive displacement vane type pump**.

The PS150 BOOST **brushless DC motors** are specially made for this system. The motor is using very advanced raw earth magnet technology, hand made wiring for highest copper density and does not need wearing brushes. This results in an exceptional high efficiency with low temperature dissipation.

PS150 BOOST can either be used in a **battery system** with voltages of 12, 24V or alternatively it can be operated as a **solar direct system** using the same Controller PS150.

The solar battery is charged up during daylight hours using the integrated charger of the PS150 controller. The charger works effectively during reduced sunlight conditions when direct pump operation is not possible.

The energy stored in the battery is available to operate the pump at any time, day or night and during periods of bad weather.

Extended bad weather periods with water demands of up to 10m^3 per day will be reliably bridged due to the high system efficiency even with low capacity batteries.

The pump is **manufactured from non-corrosive material** (stainless steel / brass / aluminum).

Before you begin Check the model numbers of all the components of your system, and verify that they are the items that you ordered. Also check against the *PUMP* specifications and performance charts (end of this manual) to be sure the system is appropriate for your application. If you think you may have the wrong pump for your application, call your supplier immediately.

Please fill in the SYSTEM REPORT. This will be essential information if any problems occur.

2 WARNINGS

PS150 BOOST IS A DC VANE TYPE PUMP. It is different from other pumps.

This is not a submersible pump.

Before beginning installation procedures, these installation and operating instructions should be studied carefully.

The installation and operation should also be in accordance with local regulations and accepted codes of good practice.

This INSTRUCTION MANUAL contains maintenance information, and is the property of the pump owner

Please give this manual to the pump owner or maintenance personnel when you are finished!

Please note: The pump must only be used in clean fresh water.

Failure to follow these instructions will void the warranty.

3 DIMENSIONS

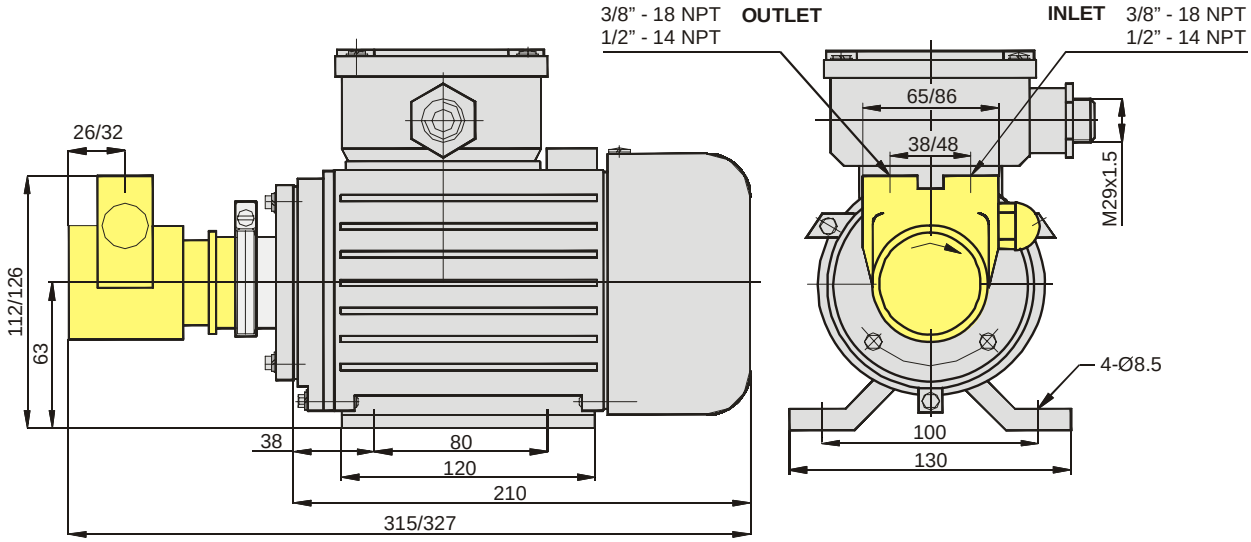

4 SYSTEM REPORT FORM

Before you start, indicate your systems datas.

System Voltage		V
Date of Purchase		
Purchased from		
Quantity of Batteries		
Battery Type		
Quantity of Solar Modules (panels)		
Solar Module Type		
Pump Model		
Pump Serial #		
Controller Model		
Controller Serial #		

Installer: Record the following

Installation Date		
Installed by		
Cut-in Pressure		bar / PSI
Cut-out Pressure		bar / PSI
Additional Suction Lift		m / ft
Total Pipe Length, Pressure Side		m / ft
Total Pipe Length, Suction Side		m / ft

Pipe

Size	
Type	

5 INSTALLATION CONTROLLER PS150

5.1 General Information

> Controlling and monitoring of the motor

> Integrated MPP-tracking and LVD battery protection

> LVD protection (low voltage disconnect) for 12 and 24V batteries

> Check and display the operating states

> Two control inputs for float- or pressure switches, remote control, etc.

> 92% max. efficiency (motor + controller)

> Adjustable maximum RPM setting, refer to pump manual for details

5.2 Technical Data

Input voltage battery:	12 V - 24 V DC
PV max. open circuit:	50 V DC
Input current, max.	20 A
Battery low voltage disconnect:	11/22 V DC
Restart voltage:	13/26 V DC
Output:	4-18V EC PWM 3-phase
Type of enclosure:	IP 54
Ambient temperature:	-20 °C to +50 °C
Weight:	1.5 kg
Dimensions:	260 x 175 x 100 mm

5.2 Warnings to Installer

Open circuit (no-load) voltage above 50 V will destroy the controller. This may occur if the wrong PV modules (solar panels) are used, or if the solar array is incorrectly wired. Measure the array voltage before connecting to the controller. A “12 V” (nominal) array should produce an open circuit voltage around 22-25 V under any daylight conditions.

Do not attempt to use this controller for any motors other than *ECDRIVE*®.

To be installed, connected and serviced **by qualified personnel only**. Ensure all power sources are disconnected when making connections to this unit. Follow all appropriate electrical codes. There are no user serviceable parts inside the motor or the controller.

Install **proper grounding for safety and lightning protection**

Do not touch the controller input or motor wires together to test for a spark.

TEST THE VOLTAGE before connecting power to the controller. Voltage (open circuit) must not exceed 50 V. Some thin-film PV-modules may produce excessive voltage, especially when they are new. If the open circuit voltage exceeds 50 V, **DO NOT** connect power to the controller. Contact your supplier.

5. 3 Mechanical Installation

Location Place the controller close to the solar array, not the pump. This will reduce the risk of lightning damage.

Protection from heat Electronic devices are most reliable when they are protected from heat. Mount the controller in the shade of the mid-day sun. An ideal location is directly under the solar array or in a nearby shaded location. An alternative is to fold a piece of sheet metal so that it mounts behind the controller and curves over it to provide shade. This provides protection in extremely hot climates.

Battery system Place the controller near the batteries but safely isolated from the battery terminals and from corrosive gases. (Batteries must be in a cool location for best longevity and enclosed for cleanliness and safety.) Connect the battery (12 or 24 V) directly with the + and – Terminal of the controller. Do not use the load terminals of the charge controller as they maybe not strong enough to allow the start current to flow. The PS150 controller has a low voltage function to protect the batteries from deep discharge. The charger (additional) is only needed for charging the batteries.

Position If it is outdoors, mount the controller in a vertical position to assure that rain will not enter the box.

5.4 Electrical Installation-Terminals

Power IN For PV-direct systems, a two-pole disconnect switch may be installed between the solar array and the controller. Switch it off to prevent shock and arc burn hazard during installation and maintenance, or if the system will be shut down for the season. For battery systems a 30 Amp slow blow fuse must be installed between the controller and the battery.

Ground Connect the ground wire to the ground connection in the controller. Grounding helps to prevent shock hazard if there is a fault in the motor.

L1 – L2 – L3 *ECDRIVE®* requires four-conductor (four-wire) cable between the controller and the motor. The three wires L1, L2 and L3 carry power. The fourth wire carries ground. To reverse direction of rotation reverse any two wires.

No. 1 and 2 In order to protect a pump from being damaged by dry running connect one well probe cable to each terminal. If dry run protection is not needed, short cut these two terminals.

No. 3, 4 and 5 Connect any kind of external switch (NO or NC type) for remote control of the controller. In case no switch is used the terminals No. 4 and 5 have to be connected with a short cable (factory setting). In case a NO-switch is used (connected to the terminals No. 3 and 4) the short cable (connecting the terminals No. 4 and 5) must remain installed.

No. 6 and 7 Connect these two terminals to switch the controller to battery mode. The motor will be switched OFF by the controller if the input voltage is below 11 V for a 12 V battery system and 22 V for a 24 V battery system in order to protect the battery. If the battery voltage increases to 13 or 26 V the motor will be switched ON automatically.

5.5 Monitoring

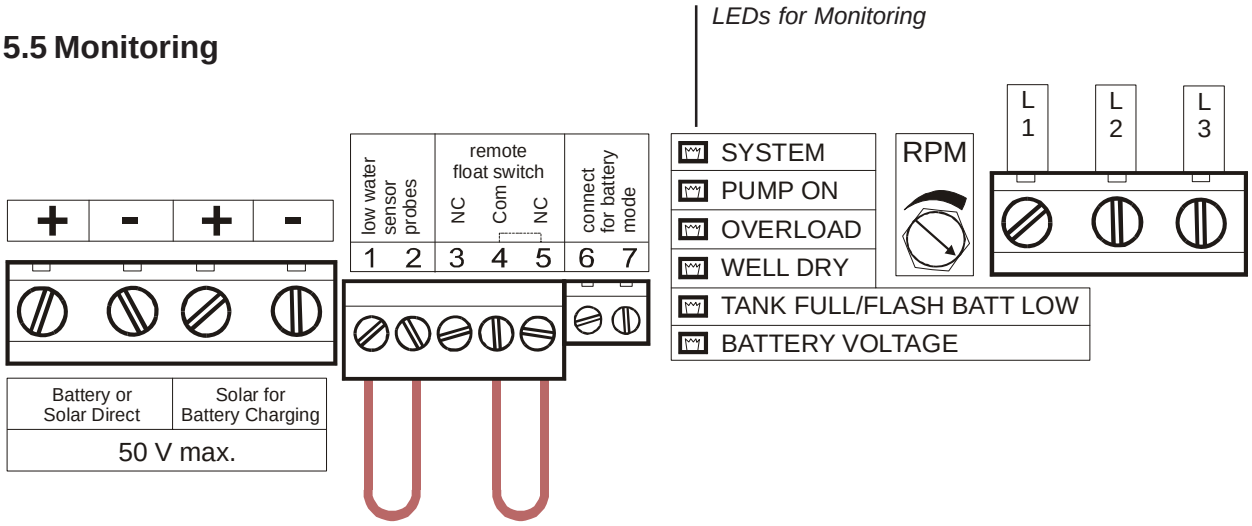

SYSTEM
Green light indicates “SYSTEM ON”

PUMP ON
Green: “MOTOR / PUMP ON”
Red: Motor OFF caused by overload protection

PUMP SPEED
PUMP ON LED will flash in following sequence:

>	300 RPM	PUMP ON LED IS ON
>	500 RPM	1 Flash
>	750 RPM	2 Flash
>	1,000 RPM	3 Flash
>	1,250 RPM	4 Flash
>	1,500 RPM	5 Flash

SOURCE LOW
Red light: Water level is low. After recovering the motor will start within 20 minutes.

Red light will remain ON to indicate low water level has occurred. For “Reset” press the ON/OFF switch.

TANK FULL
Red light: The motor has been switched OFF by remote switch.

BATTERY LOW
Red light flashing: “LOW VOLTAGE DISCONNECT” when battery is empty (in battery mode only)

5.6 Basic Operating Constraints

1. PUMP IS NOT SUBMERSIBLE

Your pump must NOT be submerged in water, or rained or dripped on.

2. WATER MUST BE FILTERED

Your pump is a **PRECISION MACHINE**. Traces of sand, clay, rust or other solids will cause rapid wear or immediate damage, just as they would in your automobile engine. If your water is **CRYSTAL CLEAR ALL THE TIME**, our Fine Intake Strainer will provide sufficient protection. If you have an intake strainer already, it is probably not fine enough - openings must be no more than several hairs wide -, or additional filtration is required. Since water conditions are subject to change, it is good insurance to use a filter regardless. Many dealers refuse to sell our pumps without a filter since it minimizes call backs.

Our 30 INCH INTAKE FILTER/FOOT VALVE is necessary for pumps lowered into wells.- Otherwise our INLINE FILTER is best, installed close to the pump's intake. If filters are expected to clog often, maintenance may be minimized by plumbing two or more filters in parallel. The INLINE FILTER has a clear bowl so its condition may be observed. **KEEP SPARE CARTRIDGES HANDY!**

FILTER CARTRIDGES are available from your dealer or the factory. 9 7/8 inch cartridges for the INLINE filter may also be obtained from local water system suppliers. The 10-20 -micron "spun polypropylene" type is best. Paper filters have less capacity. The kind that look like string has more resistance to flow. Carbon taste and odor cartridges have less capacity for dirt, more resistance to flow, and cost more. Use them only if you have, taste and odor problems.

A filter cartridge may look clean and still be clogged, due to fine silt embedded in the fibers. If the pump, becomes increasingly noisy over time, it is usually due to a clogging filter cartridge. On the other hand, a cartridge that looks discoloured may not be clogged, As long as your pump runs quietly, the filter is OK. Use pump noise to indicate the need to change cartridges.

IRON PIPE OR FITTINGS will introduce abrasive rust particles if installed on the intake side of the pump (they rust, every if galvanized). Pipe that is dirty inside (even new pipe) or has mineral deposits in it will also introduce dirt. Dirt is introduced as pipe joints are assembled, especially in a trench. Therefore, make sure inlet lines and fittings are **FLUSHED CLEAN** before hooking up to pump.

The **INLINE FILTER** may have a red push button valve to release pressure for maintenance. If filter is placed more than a few feet higher than water source (at lowest level) the suction may pull the valve open and introduce air. Prevent this by sealing around the push button with silicone sealant or epoxy, or replace the button with a nut, tightened down,

3. PUMP MUST NOT RUN DRY

Water is the lubricant for your pump. If it runs completely dry, it will overheat and fail. As an option you can install a well probe to terminals 1-2 to shut the pump off if water source is low.

6 PLUMBING SYSTEM DESIGN

If you are not experienced in **water supply design and** installation, you may wish to seek professional **assistance.** Many people are surprised to find how **"complex" water system design** can be. See diagrams on p. 16, for typical groundwater installations.

MINIMIZE SUCTION LIFT to max. **3 m** total pressure loss (**2 m** for pumps with flow rate greater than 400l/h). The practical suction limit for any pump is 6m (20 vertical ft) at sea level (subtract 0.3 m/1 ft for every 300 m/1,000 ft of elevation). The more you minimize suction lift, the more reliable and quiet your pump will be. Just be sure the motor will not be submerged if the water level rises, or it will be ruined. Your pump may be placed DOWNHILL from your water source, if feasible.

YOUR INTAKE PIPE may run any reasonable horizontal distance, although it is **BEST TO KEEP IT SHORT**. (We know of installations where the pump is placed 200 ft from the water source, using 1 1/2" pipe.) USE LARGE PIPE for the intake (1 to 1 1/2" for larger Booster Pump).

Slope the intake line from the water source UP toward the pump. AVOID HUMPS in the intake line. They trap air pockets which can block the flow. AVOID LEAKS IN SUCTION LINE. They are hard to locate and will cause constant problems.

INTAKE PIPE MUST BE SIZED GENEROUSLY to allow no more than a slight pressure drop at peak flow rate, or pump will be noisy and will wear rapidly. USE PIPE REDUCER FITTINGS to adapt your pump's inlet or outlet to larger pipe size where necessary. Excessive pipe sizing will do no harm!

INTAKE MUST NOT BE RESTRICTED by undersized pipe, excessive suction lift, or a CLOGGED FILTER. Excessive suction at the pump intake causes CAVITATION (formation and implosion of vapor bubbles). This causes very loud buzzing noise and RAPID PUMP

WEAR. A slight buzzing noise is acceptable, if it cannot be avoided.

DO NOT USE THIN WALL HOSE or soft tubing on the pump's intake. It may collapse under suction and restrict the flow. Do not use polyethylene pipe (black flexible) for the suction either. It is prone to slight leakage at the fitting

INLINE FILTER should be mounted **HORIZONTALLY and as low as possible.** This prevents any air trapped in it from blocking the water flow. Be sure to leave some space below it for a pan, to catch water when replacing the filter cartridge.

FOOT VALVE is a check valve installed at the water intake. It is required in any case where the pump is located higher than the low water level in the source. We recommend a high quality spring loaded type to avoid loss of prime. A check valve allows water to flow one way and not the other. Be sure to install it the right way!

New pumps are packed with foam plugs to prevent contamination. **REMOVE FOAM PLUGS BEFORE CONNECTING PIPES.**

PRIMING YOUR PUMP: Priming a pump means filling its intake and suction line completely with water. This must be done if the pump is mounted higher than the water source. A removable plug or a valve must be installed at the highest point is in the suction plumbing. Prime the pump and intake line by pouring water into the opening until it is completely full. Your foot valve prevents loss of prime by not allowing water to flow back into the water source.

Your pump will create enough vacuum to **SELF-PRIME** to around 3 m/10 ft (less at high elevations), but only when it is in new condition and wet inside. A priming plug is always recommended if the pump is to be located higher than the water source. You may use a good quality ball valve instead of a plug, if frequent priming is expected.

A CHECK VALVE AT THE PUMP OUTLET is required if there is more than a 30 ft lift above the pump, or in any pressurizing system. This allows the pump to start easier. It also prevents back flow when changing filter cartridges.

PIPE UNIONS: If you run rigid piping (copper or PVC) directly to the pump, unions are required. Unions make pump replacement easy, without the need to cut and re solder or re glue the pipe. "Copper Flex Connectors" commonly used for water heaters may be used instead.

7 MOUNTING YOUR PUMP

Locate your pump in a cool place. Do not allow direct exposure to sunshine **during** operation, or the motor may overheat. Allow free flow of air around the **motor for cooling.** SHELTER IT FR.OM RAIN AND SUN, or it will be a mess in a few years.

The pump may be mounted horizontally or vertically. If vertically, **FACE THE PUMP** HEAD DOWNWARD. RIGID MOUNTING IS NOT required in most installations. In a non battery system, starting is gradual and the pump does not jerk with the start. In a battery system, it will jerk slightly, but simply mounting it to a small wooden board is sufficient to stabilize it. The pump may be hung vertically on a rope. Observe the pump and see that it is not likely to overstress or loosen pipes as it starts. DO NOT mount the pump directly to a wall or wood floor in your home. It will increase the noise.

CHANGING PUMP HEAD POSITION: If you wish to face the pump's fittings sideways or downwards, please do. You may rotate pump head to a different position by loosening the clamp screw that secure the pump to the motor. BEFORE installing the pump, drop a teaspoon of water into the inlet and run the pump.

HANDLE YOUR PUMP CAREFULLY! Never hammer on it, clamp it in a vice or drop it.

To **PREVENT FREEZING** of exposed pipes you might consider the primitive method of drilling a small "weep hole" in the outlet pipe, below ground level. The pipe Will drain when pumping stops but a small amount of water will be wasted during pumping. Set the outlet pipe to spill into the top of the tank so that the tank will not drain, or install a check valve and "vacuum breaker" to allow pipe to drain.

Water WILL drain back through the pump if allowed to, but it will do so slowly. If this is desired, do not use any check valves or foot valve. Pump must have suction draw of no more than about 3 m/10 ft, however. If pump drainage is required, position pump vertically (head downward) or horizontally with intake and outlet facing downward.

Take every precaution to PREVENT pump freezing. The forged brass pump head will survive most light freezes, but a hard freeze may damage it. If you insulate your pump for freeze protection, keep the motor exposed so it won't overheat.

8 INSTALLATION IN DRILLED WELL CASINGS

INSIDE A 6 INCH WELL CASING, SPECIAL ELBOWS ADAPTERS are required. The elbows fit 1/2" polyethylene (black flex) pipe. MEASURE CAREFULLY to determine the length of pipe you need. **SUBTRACT 1.5%** TO ALLOW FOR PIPE AND ROPE STRETCH.

Assemble according to diagram. A priming plug is not needed. Before lowering the pump, place the intake into a bucket of clean water and run the pump until water exits. Now it is primed. A “pitless adapter” may be optimum for freeze protection. Check with your **local well supplier for** details.

POLYETHYLENE PIPE comes in rolls, and is inexpensive and quite freeze tolerant. Use with plastic adapters and secure with ALL STAINLESS hose clamps (obtain such clamps from a pipe supplier rather than automotive supplier). If pipe does not stretch tightly over fittings, warm it with a torch or hot water then tighten clamps firmly with a wrench. Keep extra clamps handy in case you strip one.

9 ELECTRICAL WIRING

9.1 General

WIRE SIZING: DON’T CHEAT YOURSELF with undersized wire! Splice it to a larger size of wire if your wire run is longer than 2 m / 7 ft. A wire sizing table for the motor cable is shown on page 10 of this manual. Consult a low voltage wire size chart to size the cable size from tha array to the controller or call your dealer or the factory for recommendations. Excessive voltage drop will slow the pump down, but if it is unavoidable, don’t worry. It will NOT cause any harm to the motor. The cable ends are labelled 1, 2, 3. Connect them in this sequence with the pump controller to have the correct direction of turning (clockwise). Check from the fan of the motor. Looking on the fan of the motor the direction is counter clock wise see also the arrow. Changing the polarity of the DC (plus & minus) input of the controller will not change the direction of turning! Only changing two of the three motor phases will do.

In case the motor turns in the wrong direction exchange any of the three motor cables. Turning in the wrong direction will not damage the pump if done for a short time. Reverse the wires if necessary so that pump turns **CLOCKWISE** looking from purtip end.

If water flow becomes blocked, or if the pump jams or freezes and cannot turn freely, the motor will draw excessive current. A fuse or circuit breaker will then break the circuit. The controller has an overload protection but in case of a short circuit you will protect the batteries.

Install a 20 Amp fuse or breaker. Install the fuse between the battery and the pump controller.

FUSES: Use a “time delay” type installed into a rain tight disconnect switch available at any electric supplier. An automotive in-line fuse holder is fine for 12 or 24 V systems. Automotive blade fuses (type ATC) are preferred over glass fuses. They have sufficient time delay. (Time delay glass fuses are available from ELECTRONIC suppliers only, not automotive.) Use good quality fuse holders, protected from weather. Keep spare fuses handy.

CIRCUIT BREAKERS: Most AC breakers cannot be used for low voltage DC circuits. It may be ordered from your PV dealer or from an electric supplier.

9.2 Grounding and Lightning Protection

A long wire run may act like an antenna, receiving induced surges of high voltage when lightning is present. Proper grounding will greatly reduce risk of lightning damage to your power system.

A proper ground system consists of a minimum of one 2.5 m / 8 ft copper plated ground rod driven into the ground, preferably in a moist spot close to the PV array. Or, if you have a steel well casing, drill and tap a bolt hold to make good contact to it.

In a dry, lightning prone location, use more than one ground rod at least 3m / 10 ft. apart. Bury bare copper wire between them. Use min, 4mm^2 / #8 ground wire (larger for distances exceeding 20 ft.). In a rocky location, where ground rods can’t be driven, bury (as much as feasible) 45m / 150 feet (total) of bare copper wire, radiating out in two or more directions from the PV array. Try to contact moist earth as much as possible. Use only the copper or bronze electrical connectors designed for grounding application, and BE SURE ALL CONNECTIONS ARE TIGHT.

Connect your ground system to the METALLIC FRAME of your PV array via min. 4mm^2 / #8 copper wire. Also ground metallic support structures and electrical enclosures.

9.3 System Wiring for 12 V Battery Installation

12 V system: Voltage from panels will read 22-25 V when disconnected (open circuit).

Connect the pump controller directly to battery bank.

Remote Tank Float Switch: Connect float switch to terminals 4-5 of the pump controller when it breaks contact on rise, to turn the pump OFF.

Otherwise use terminals 3-4 for opposite function.

Grounding: Connect either battery minus or solar minus to ground, never connect both to ground!

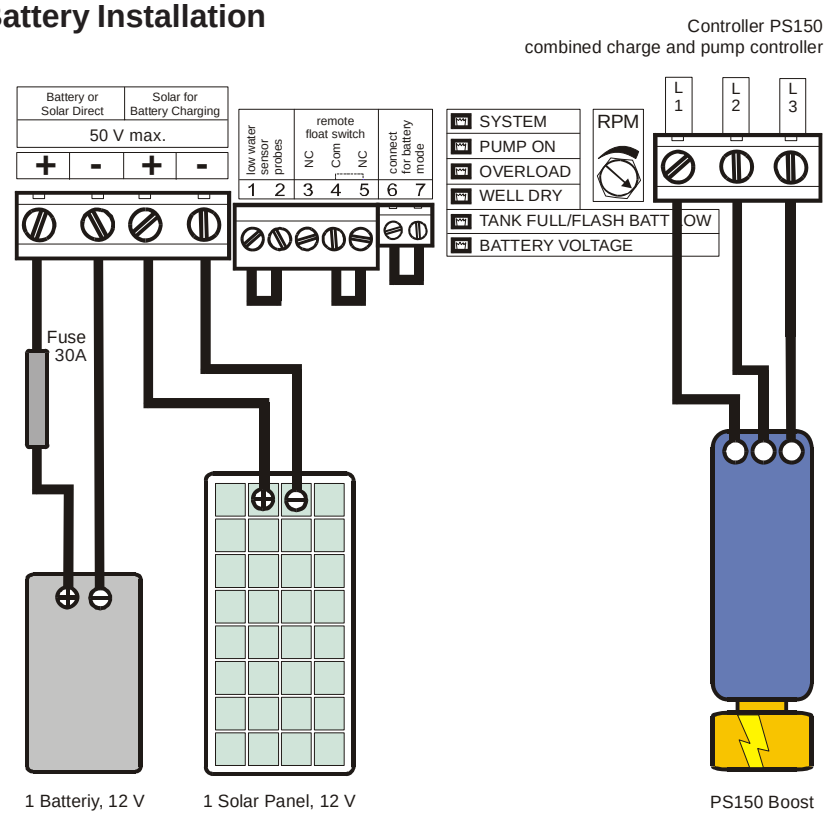

9.4 System Wiring for 24 V Battery Installation

"Series" Wiring is shown, for *nominal* 24 V system: Voltage from panels will read 45 V when disconnected (open circuit).

Installing a Solar Tracker? Use stranded wire for flexibility. Secure the wires to tracker with plenty of tape. Leave a good slack loop to allow free motion of tracker.

Remote Tank Float Switch: Connect float switch to terminals 4-5 of the pump controller when it breaks contact on rise, to turn the pump OFF.

Otherwise use terminals 3-4 for opposite function.

Grounding: Connect either battery minus or solar minus to ground, never connect both to ground!

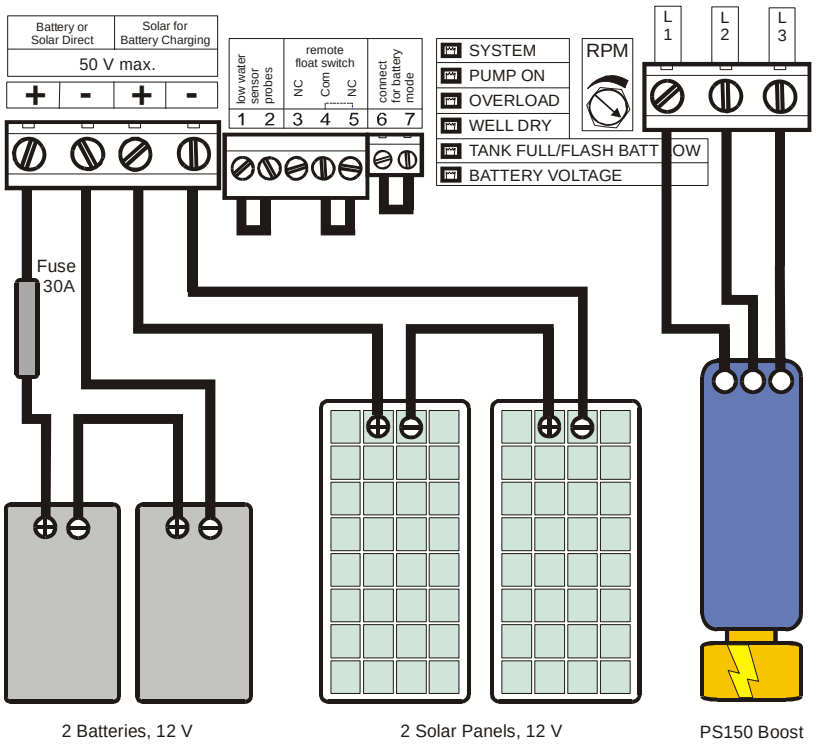

9.5 System Wiring for 12-24 V Solar Direct Operation

12-24 V Solar direct **system**: Voltage from panels will read 22-44 V when disconnected (open circuit).

Use the **left** power terminals to connect the solar array with the controller

Note: The jumper wire on terminal 6 and 7 must be taken out for solar direct mode.

Remote Tank Float Switch: Connect float switch to terminals 4-5 of the pump controller when it breaks contact on rise, to turn the pump OFF.

Otherwise use terminals 3-4 for opposite function.

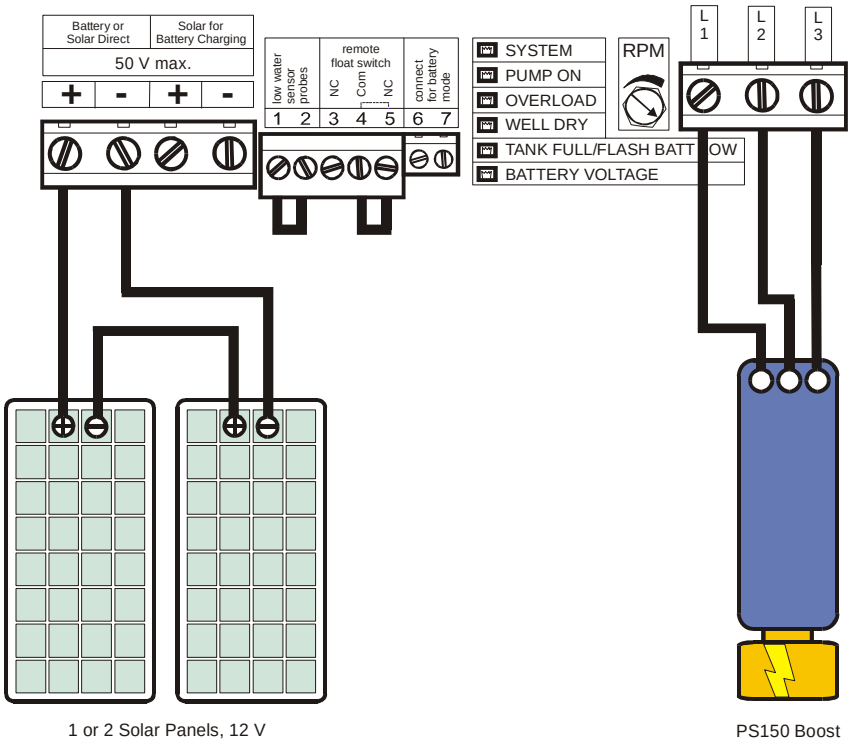

Cable Length		Pump Watts – Wire Size mm² / AWG			
[m]	[ft]	50 W	100 W	150 W	200 W
5	17	2.5 / #14	4.0 / #10	4.0 / #10	6.0 / #8
10	33	2.5 / #14	4.0 / #10	6.0 / #8	8.0 / #8
15	50	4.0 / #10	6.0 / #8	10.0 / #8	10.0 / #6
20	65	4.0 / #10	10.0 / #8	12.0 / #6	14.0 / #6

9.6 Power Control for Solar Direct Operation

PS150 BOOST requires nearly constant current, regardless of the voltage/speed. When low light conditions are present, the PV array cannot supply full current. The voltage will drop to nearly zero, and the pump will “stall” (like a truck trying to start in 4th gear). The PUMP CONTROLLER, also called LINEAR CURRENT BOOSTER (LCB) including Maximum Power Point Tracking (MPPT) acts like a “gear box” in your car. This device will match the power source to the load by transforming the voltage down while increasing the current delivered to the motor (like an automatic transmission). Beside this the controller (supplied with all systems) has a speed control function, terminals to connect float and well probe sensor, a battery low voltage disconnect to protect the batteries from being over discharged and a 12/24 V charger included.

LEDs indicate Pump ON, Pump Speed, Well dry, Tank full, Battery status.

10 WATER LEVEL AND FLOW CONTROL

FLOAT SWITCHES/WATER LEVEL SENSORS: These are devices that sense high or low water level and switch your pump on and off . FLOAT CONTROL IN WATER SOURCE may be used if dropping water level is causing dry run or excessive suction (noise due to cavitation).

In case the pump sucks water from a shallow well, connect our well probe sensor (article #1658) to terminal 1-2 in the pump controller. There is a 20 min time delay to restart the pump once the well was dry. The well dry LED will light up and once the pump has restarted it will slowly flash to indicate that the well was dry before.

FLOAT CONTROL IN STORAGE TANK may be used to turn pump off when tank fills. This eliminates tank overflow and reduces pump wear and filter changing.

Small wire buried from tank/float switch to pump controller. (Connect to Terminal 4-5 for NC type switch), there is no time delay for restarting.

Or a Float valve in tank restricts flow. Pressure builds up and actuates pressure switch at pump. Small captive air pressure tank is necessary at pump to prevent “switch chatter”.

Contact your dealer or the factory for further advice. **FLOW RESTRICTION MUST NOT BE USED** as a method to reduce your pump’s flow rate. It may result in excessive pressure build up and current draw. Use the controllers RPM knop to adjust the flow rate.

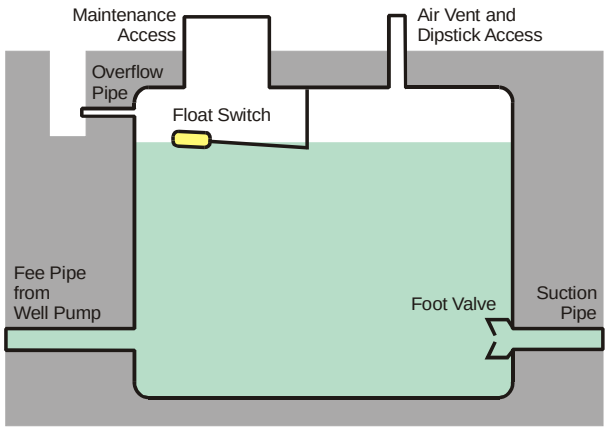

PS150 BOOST Pump Installation: From cistern or storage tank, where pump must be higher than source.

11 PRESSURIZING SYSTEMS

A PRESSURE TANK IS REQUIRED with a **Booster Pump system. PRESSURE** TANKS are available from local water supply dealers. Use the **largest tank you** are willing to buy. 150l/40 US_gal. size is typical; it allows you about 45l/12 US-gal. of water between pump cycles. Those 45l/12 US-gal. may be drawn at a higher flow rate than the pump produces. A large pressure tank will minimize on/off cycling of the pump. In a typical household of more than four people, a tank of at least 230l/60 US-gal. is recommended. The bigger the better! More than one tank may be connected. They need not be the same size.

A PRE CHARGED “CAPTIVE AIR” TANK is recommended. Cheaper “galvanized tanks” require periodic recharging, store less water between cycles, and don’t last as long. **PROPER PRE CHARGE IS ESSENTIAL** to proper operation. Follow the instructions that come with your pressure tank. (With pressure discharged from the tank, adjust pre--charge to about 0.2 bar/2 PSI below cut in pressure.) This is very important.

PRESSURE SWITCH ADJUSTMENT: Switch settings determine the pressure range of your system. To conserve energy, set the pressure as LOW as feasible. This will also prevent the motor from overheating if you run it for long periods sprinkling, for example. Low pressure (even 1-1.5 bar/15-20 PSI) may deliver excellent water flow IF your plumbing and hoses are sized larger than minimum. If not yet plumbed, use at least one size larger pipe than conventional, and avoid restrictive connections such as 3/8" tubing often used to feed sinks.

Adjustment: Start with the standard setting (usually 2.0/3.5 bar respectively 30/50 PSI). Reduce the pressure according to your requirements, if you wish. It is wise to measure the current used by your pump (with an amp meter in series with the line, your system metering). Current draw will rise in direct proportion to outlet pressure. Pressure should NOT be set beyond 4.5 bar/

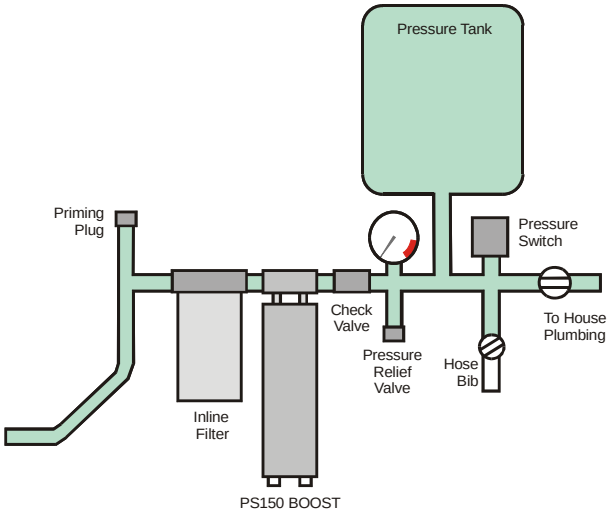

50 PSI MAXIMUM or loss of efficiency and motor over heating will result. IMPORTANT: After any change to your cut in pressure, you need to readjust the pressure tank pre charge.

If you are raising water vertically AND pressurizing. Example: A pump that lifts 3 m / 10 vertical feet and pressurizes to 2.1 bar/30 PSI must pump a total of 2.4 bar/35 PSI.

Total lift = vertical distance from water surface to pressure tank.

INSTALL THE PRESSURE RELIEF VALVE near your pressure tank (at the "Accessory Tee" shown in diagram). Run a pipe or hose from its outlet to a drain or drain pipe or to the outdoors where water can drain away safely.

A GATE VALVE and DRAIN VALVE are recommended (see diagram) for convenience during system shut down. The drain valve is simply a garden hose outlet which allows easy draining of the system. It also allows water delivery by hose while water is shut off to the house during installation or repairs to plumbing.

INSTALLATION KIT IS AVAILABLE! If you have not yet purchased the small parts you need to install your Booster Pump, you can save time and confusion by purchasing our convenient parts kit. All components are selected for maximum quality and convenience.

11.1 Pressure Switch Wiring

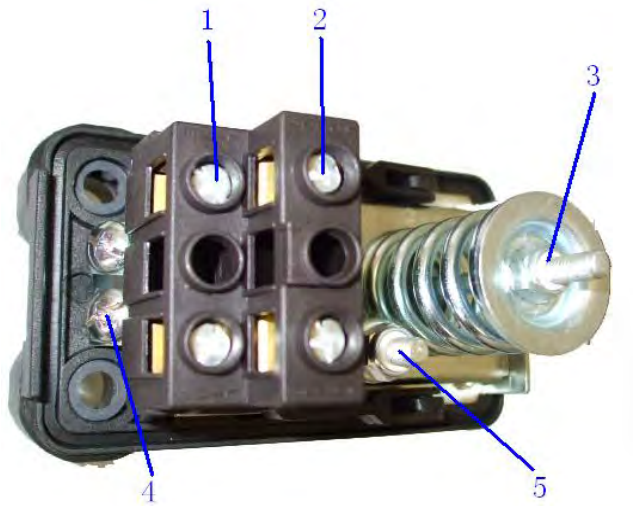

1. Connect to Float switch terminal 4 of PS Controller
2. Connect to float switch terminal 5 or 3 depending of NC or NO function
3. Setting of cut-in pressure
4. Earth terminals
5. Setting of pressure differential

Pressure Setting

Completely release nut for setting of differential (5).

Adjust nut (3) until required cut-in pressure is obtained.

Tighten nut (5) until required cut-out pressure is obtained.

You need a pressure gauge to find the right setpoints for your application.

You can also use the pressure switch to switch the main power supply of the pump. But the recommendet way is to avoid any switch power losses and to use the float switch terminals of the PS controller to start and stop the pump

WARNING: INSTALL THE PRESSURE RELIEF VALVE INCLUDED WITH YOUR PUMP! Some PS150 BOOST Pumps for city water pressure systems are supplied with a 6 bar / 85 PSI Pressure Relief Valve as a safety feature. If your pressure switch fails, EXCESSIVE PRESSURE may cause your tank of piping to burst and flood your home.

12 MAINTENANCE

INTERNAL INTAKE SCREEN: The pumps of Series 1300 have an internal metal intake screen. Its purpose is to catch solids accidentally introduced during installation or filter servicing, dirt stuck inside your intake pipe before installation, or mineral deposits that may accumulate and flake off of the intake piping. 1300 SERIES *"PS150 BOOST"* has an angled extension with a large brass nut on the end. Remove the nut to inspect and empty screen.

EXTERNAL FILTRATION IS STILL REQUIRED! If you notice signs of intake blockage, inspect your screen. If solids keep accumulating, improve your filtration. See Page 6 for details about filters and cartridges.

PUMP HEAD: Except for the internal screen, your pump head is maintenance free. DO NOT remove its front plate or otherwise tamper with it unless you are intending to get it rebuilt. The pump head is NOT USER SERVICEABLE. It is easy to disassemble, but difficult to reassemble without special tools.

WATER FILTER: KEEP SPARE CARTRIDGES! If you cannot obtain suitable cartridges locally, ask your dealer, or the factory. The best way to determine when a cartridge is becoming clogged is to listen for an increasingly loud buzzing noise (cavitation). It is difficult to determine the condition by the appearance of the cartridge.

***30" INTAKE FILTER*, WARNING:** Cartridges vary slightly in outside diameter. If replacement fits loosely into end caps, wrap ends with cloth or tape to make a snug fit. If cartridge is too large to fit, peel away some fibers using a knife. End caps MUST fit snugly or dirt will enter!

13 TROUBLESHOOTING

PUMP WILL NOT FIT INTO YOUR 5" OR 6" DRILLED WELL CASING: Special elbow fittings are required. Contact dealer or factory.

PUMP DOESN'T TURN ON/NO POWER: (1) CHECK FUSE or BREAKER and any control or wiring devices in line.

PUMP SPINS BUT DOESN'T PUMP WATER: (1) CHECK DIRECTION of rotation. If not clockwise (viewed from brass front end) reverse any of the three motor phases. DO NOT CHANGE THE DC INPUT POLARITY! (2) CHECK PRIME: Open priming plug or valve (see instructions). Pour water in. LOSS OF PRIME/INTAKE PIPE LEAKAGE: CHECK ALL FITTINGS - a pinhole leak in suction pipe will cause loss. FOOT VALVE may leak. Inspect, pressure test, clean or replace. Debris may be stuck in foot valve causing leak ff not protected by fine screen or intake filter. REGARDING POLYTHYLENE PIPE FITTINGS: If pipe does not stretch tightly over fittings, it may leak. Gently heat with torch or hot water and retighten hose clamp WITH WRENCH. Replace stripped clamps. Use ALL STAINLESS clamps.

NOISY PUMP:
NOISE = CAVITATION = RAPID PUMP WEAR
FIX THE PROBLEM!

STEADY SOUND Indicates EXCESSIVE SUCTION due to any combination of (1) HIGH SUCTION LIFT mount pump as low as possible, (2) UNDERSIZED SUCTION PIPE, (3) CLOGGED FILTER NOTE: Fiber filter cartridges may be clogged and LOOK CLEAN (fine silt is hidden within the fibers). (4) CLOGGED INTERNAL INTAKE SCREEN. See next two entries. (5) SOFT, FLEXIBLE HOSE used on intake line may be crushed or kinked by suction -replace with more rigid pipe material.

UNSTEADY BUZZING SOUND Indicates LEAK IN SUCTION LINE allowing AIR to enter. (1) Check for bubbles in inline (transparent) filter or air in outlet water. (2) See LOSS OF PRIME in above entry. (3) If you have INLINE FILTER with red Pressure Relief Valve (red button) on top, and it is mounted several feet above water source, air may be drawing in around the valve, SEAL AROUND THE VALVE with silicone sealant or epoxy glue OR unscrew the red button and replace it with a nut, tightened. (4) If no source of air leakage is present, water may have high concentration of DISSOLVED GASSES which release as bubbles in suction pipe. Reduce suction lift if possible. Install air chamber in intake line, with valve on top. Pour water in to replace air when problem reappears. (5) Turn filter to a horizontal position. This allows bubbles to get out of the way of flow. Do NOT turn it upside down, or dirt may fall in when filter is changed.

NOISE AND VIBRATION IN PIPES (pressure gauge vibrates wildly): One of four vanes in the pump is broken. Pump head must be rebuilt See Rebuild/ Exchange Service. (There should be almost no vibration of pressure gauge needle.)

FILTER CLOGS FREQUENTLY: (1) INTAKE TOO CLOSE to bottom of well, stream, tank etc. Raise it as high as feasible to reduce intake of dirt. (2) IMPROVE DEVELOPMENT of spring channel water into a settling tank, clean tank periodically. (3) Install a larger filter, or plumb two filters parallel to each other.

CLOGGED INTAKE SCREEN: Safety screen is located at the pump intake. Remove large nut (1300 series) to inspect and clean screen. (1) IF YOU DON'T HAVE A CARTRIDGE TYPE FILTER, INSTALL ONE NOW! (2) If screen is clogged with fibers from filter cartridge, use higher quality cartridges. (3) If screen is clogged with rust deposits, replace iron pipe or fittings with plastic, copper or brass. (4) If mineral or corrosion deposits are clogging screen, install filter as close as possible to pump intake. Ask local water professionals what type of pipe is least susceptible to mineral accumulation and corrosion in your area.

FILTER IS CLOGGED AND YOU DON'T HAVE REPLACEMENT: (1) IN LINE FILTER: Purchase common "Rust and Sediment" fiber wound cartridge at local hardware store or pump/well supplier. (2) 30" INTAKE FILTER: Obtain spares from your dealer, factory or industrial suppliers. In emergency, purchase 3 ordinary 1 10' fiber filters (not paper) from local source. Glue them end to end with epoxy and install. (3) TRY BACK WASHING filter by blasting it with pressure from the inside. For 30" intake filter, remove check valve and attach garden hose adapter. Back washing is effective on coarse, sandy material but is NOT effective with clay, rust, very fine or sticky deposits.

PURCHASE SPARE FILTERS. NEVER RUN PUMP WITHOUT A FILTER!

LOW FLOW RATE † PUMP TURNS FAST, DRAWS LOW CURRENT: Pump is worn out from dirt, rust or other abrasive particles in water, or from cavitation, from running dry, or just from age. REPLACE PUMP HEAD.

BOOSTER PUMP TAKES LONG TIME TO REACH CUT OFF PRESSURE: (1) If pump spins fast, see above entry. (2) If pump rotation slows way down as pressure builds, wire is too small. Consult low voltage wire size chart or ask your dealer for correct wire size.

LOW FLOW RATE - PUMP TURNS SLOW, DRAWS HIGH CURRENT (may run hot, may blow fuses): Pump is hard to turn due to: (1) EXCESSIVE VERTICAL LIFT, beyond system's capacity: Trade pump head for lower volume model, or increase size of solar array if it will not overpower the motor -see Specifications Chart. (2) MINERAL DEPOSITS: Turn shaft with two fingers. Will be hard to turn. Use vinegar, or whatever solution works to dissolve the mineral deposits in your plumbing. Remove pipes from pump and allow solution to circulate through pump by turning it backwards. If this doesn't work, or if pump has been damaged, replace or rebuild.

14 WARRANTY

BOOSTER PUMP CYCLES ON AND OFF EVERY FEW SECONDS (PRESSURIZING SYSTEM): PRESSURE TANK MUST be used with system. Pre charge tank via air fitting to 0.15 bar/2 PSI less than cut in pressure. Turn power off and release water pressure before setting pre charge. Modern “captive air” tank will not need pre charging again. GALVANIZED TANK (without air bladder) MUST BE RECHARGED with air about once per year as air dissolves into water. Use tire pump or compressor.

BOOSTER PUMP TURNS ON PERIODICALLY WHEN NO WATER IS BEING USED. (1) Water is leaking somewhere after the check valve (check valve must be installed at pump outlet). (2) Check valve leaks internally. Foot valve, if present, also leaks.

PUMP RUNS TOO SLOW OR STALLS IN LOW LIGHT (Array Direct, Non Battery System): (1) Solar array or wire is undersized. (2) RPM speed control pot is turned to low RPM, turn full clock wise. Contact dealer or factory.

PUMP WON’T TURN, shaft (turn the fan) can’t be turned by hand. Should blow fuse or breaker: (1) After a period of disuse or storage, parts may lock up. Grab shaft (fan side of motor) lightly with pliers and try turning it backwards. (2) Debris jammed in pump. Disconnect plumbing, pour water into outlet, and run pump in REVERSE . Watch for debris exiting inlet. Check performance - damage is likely. (3) See “Pump Frozen”.

PUMP JAMS, MAKES CRUNCHING NOISES, black material in outlet: Internal parts are broken, either by debris in pump, severe freezing, external shock or just bad luck. See “Rebuild/Exchange Service”.

WATER DAMAGE: MOTOR SUBMERGED OR DRIPPED ON. Inspect motor. If in very poor condition, motor may be beyond repair. **Contact** factory. If motor was not run wet for very long, it may need only new bearings. CORRECT THE CAUSE of damage. If your water level is too unstable, contact your dealer or factory about a submersible pump.

PUMP FROZEN BY LOW TEMPERATURE: (overload LED is ON) Allow it to thaw. Observe/test performance. If damaged, replace or rebuild. Check all plumbing for damage and leaks and protect from future freezing.

Your pump is warranted to be free from defects in material and workmanship for one (1) YEAR from date of purchase.

Failure to provide correct installation, operation, or care for the product, in accordance with instructions, will void the warranty.

Product liability, except where mandated by law, is limited to repair or replacement, at the manufacturer’s discretion. No specific claim of merchantability shall be assumed or implied beyond what is printed on the manufacturer’s printed literature. No liability shall exist from circumstances arising from the inability to use the product, or its inappropriateness for any specific purpose. It is the user’s responsibility to determine the suitability of the product for any particular use.

Pump Rotor / Stator / Vanes of PS150 BOOST Motor / Pump are considered to be normally wearing parts, and are not covered under warranty. Warranty does not cover damage due to sand or abrasive silt in the water, mishandling or other abusive conditions, lightning or other acts of nature.

Warranty of pump controllers does not cover damage due to: mishandling or abuse; failure to protect from weather exposure; failure to protect from overheating due to sun exposure; failure to seal out insects, spiders or rodents; lightning, flood or other acts of nature.

In all cases, it shall be the responsibility of the customer to insure a safe installation in compliance with local, state and national electrical codes.

Bernt Lorentz GmbH & Co. KG
Heidekoppel 16
D-24558 Henstedt-Ulzburg
Germany

Tel. ++49.4193.7548-0
Fax ++49.4193.7548-29

www.lorentz.de
info@lorentz.de
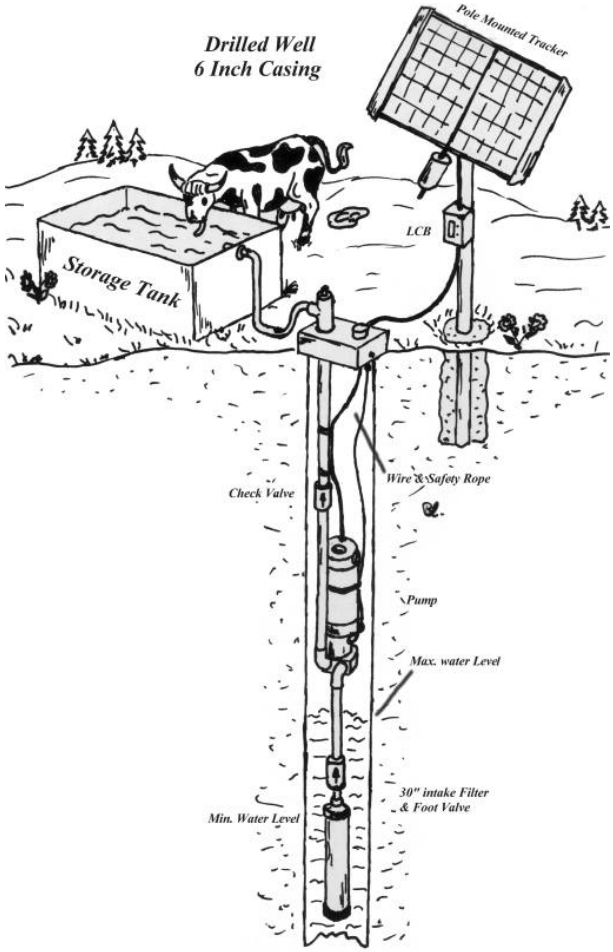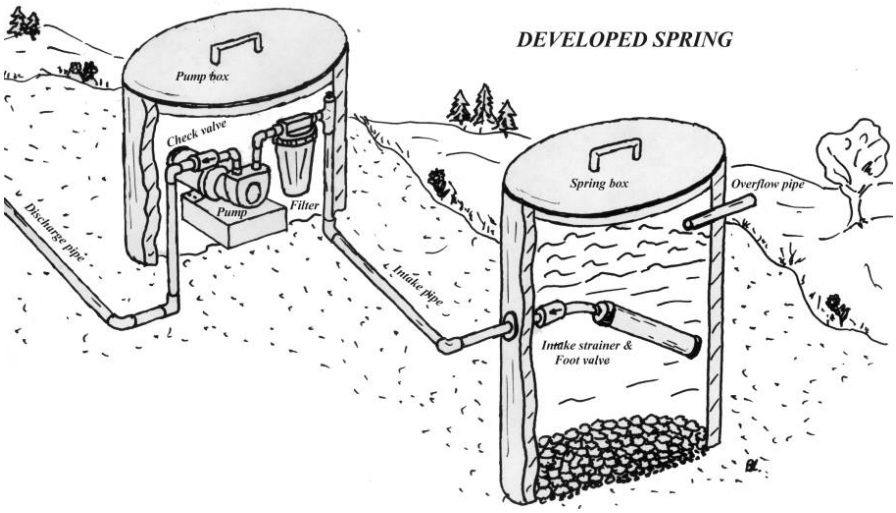
Copyright © 2004, 2005 by BERNT LORENTZ KG, all rights reserved.