installation guide

top mount fridges

Models: RJ523V, RJ525V, RJ522V, RJ443V, RJ445V, RJ442V, RJ423V, RJ425V, RJ422V, RJ393V, RJ395V, RJ392V, RJ362V, WTM3300WA, WTM2900WA

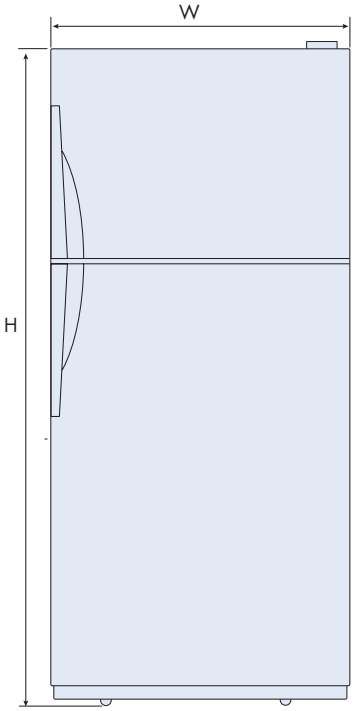

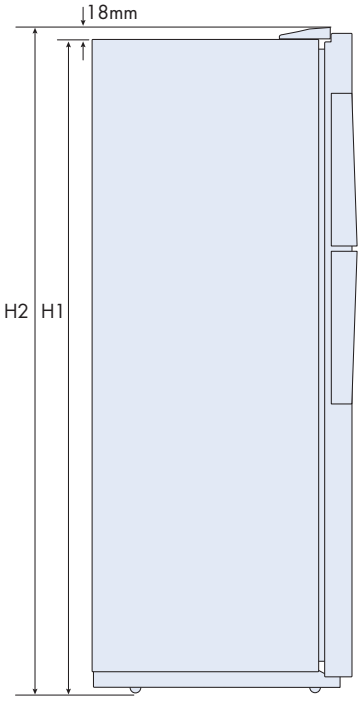

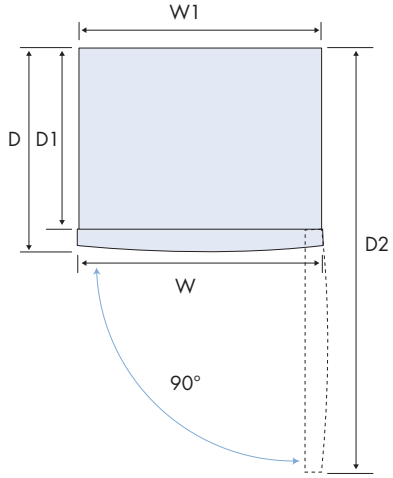

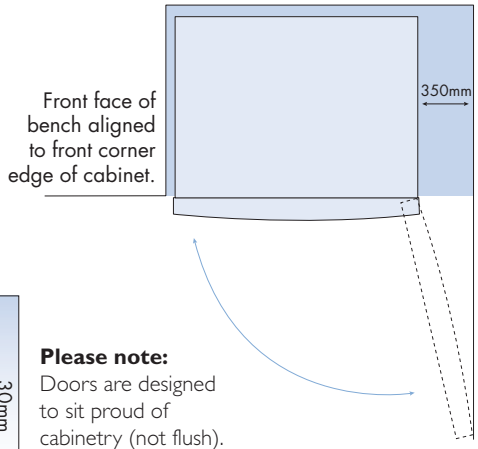

When positioned in a corner area, spacing of at least 350mm on the fridge side will allow the doors to open enough to enable the removal of the bins and glass shelves.

Recommended airspaces:

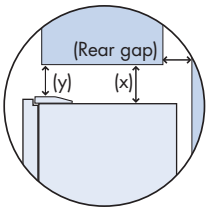

If you do not have a cupboard with a rear gap, the recommended clearance on top increases from 50mm to 90mm (x) and 32mm to 72mm (y).

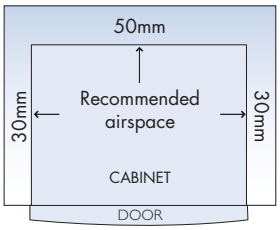

Please note:
Doors are designed to sit proud of cabinetry (not flush).

Current as at March 2006. © 2006 Electrolux Home Products Pty Ltd. WIGTMF 01/06

	max door height (H)	cabinet height (H1)	total height (H2)	door width (W)	cabinet width (W1)	total depth (D)	cabinet depth (D1)	depth door open (D2)
RJ523V, RJ525V, RJ522V	1714	**1702**	1720	803	**790**	709	**612**	1450
RJ443V, RJ445V, RJ442V	1714	**1702**	1720	703	**690**	709	**612**	1350
RJ423V, RJ425V, RJ422V	1634	**1622**	1640	703	**690**	709	**612**	1350
RJ393V, RJ395V, RJ392V	1714	**1702**	1720	703	**690**	647	**550**	1288
RJ362V	1634	**1622**	1640	703	**690**	647	**550**	1288
WTM3300WA	1714	**1702**	1720	608	**595**	647	**550**	1193
WTM2900WA	1544	**1532**	1550	608	**595**	647	**550**	1193

All measurements in millimetres.

installation guide

top mount fridges

Models: RJ182T, RJ202T

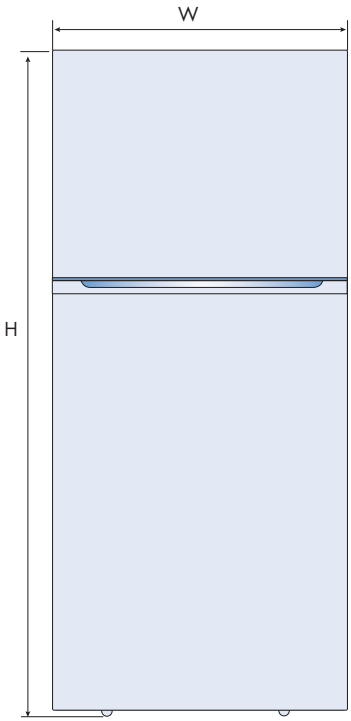

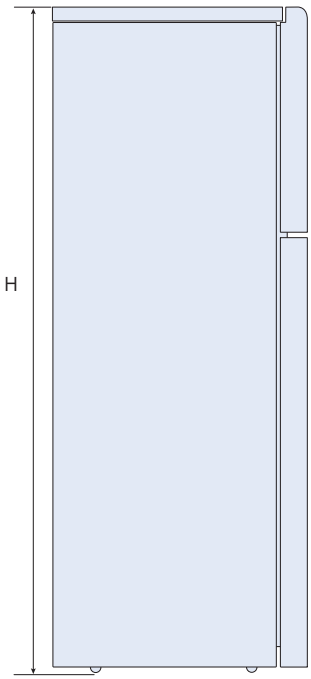

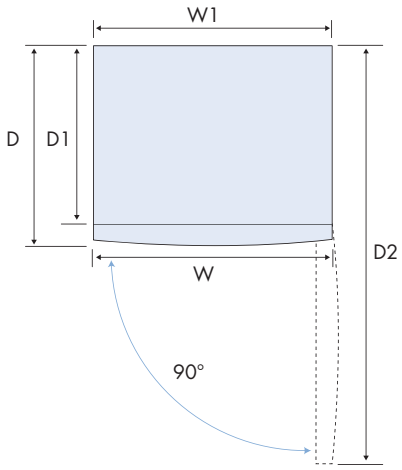

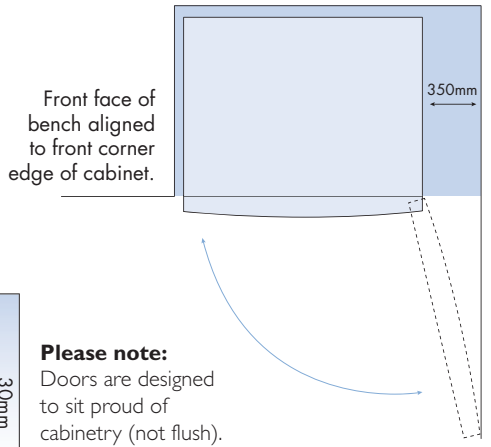

When positioned in a corner area, spacing of at least 350mm on the fridge side will allow the doors to open enough to enable the removal of the bins and shelves.

Recommended airspaces:

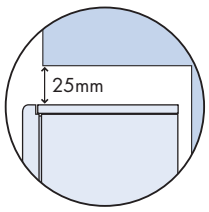

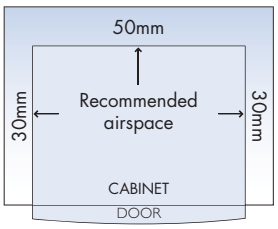

Please note:
Doors are designed to sit proud of cabinetry (not flush).

Current as at March 2006. © 2006 Electrolux Home Products Pty Ltd. WIGTMFT 01/06

	total height (H)	door width (W)	cabinet width (W1)	total depth (D)	cabinet depth (D1)	depth door open (D2)
RJ182T	**1394**	**494**	490	577	**490**	1029
RJ202T	**1480**	**524**	520	584	**500**	1058

All measurements in millimetres.